11.9–18 GHz Waveguide-to-Coaxial Adapter, N-Type Female

The adapter connects waveguide and coaxial paths across 11.9–18 GHz with VSWR≤1.30. Its N-Type female connector is non-detachable.

The aluminum housing has conductive color anodizing and a –40–+70 °C operating range. The original outline records dimensions and flange mounting positions.



Electrical specifications

Parameter	Value	Unit
Model number	LCTN140-N-D	-
Frequency range	11.9–18.0 (Minimum: 11.9 GHz. Maximum: 18 GHz.)	GHz
VSWR	≤1.30 (Maximum: 1.3.)	-
Connector type	N-Type — Female; non-detachable	-
Surface finish	Conductive color anodizing	-
Housing material	Aluminum	-
Operating temperature	–40–+70 (Minimum: -40 °C. Maximum: 70 °C.)	°C
Dimensions	See original outline drawing	-

Mechanical Outline

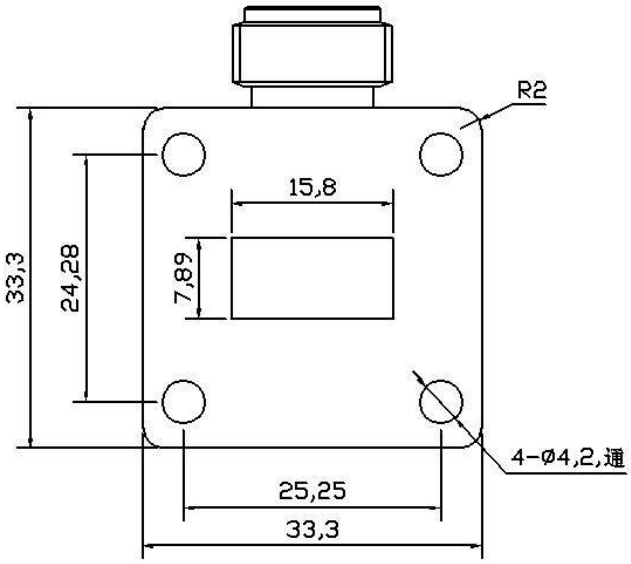

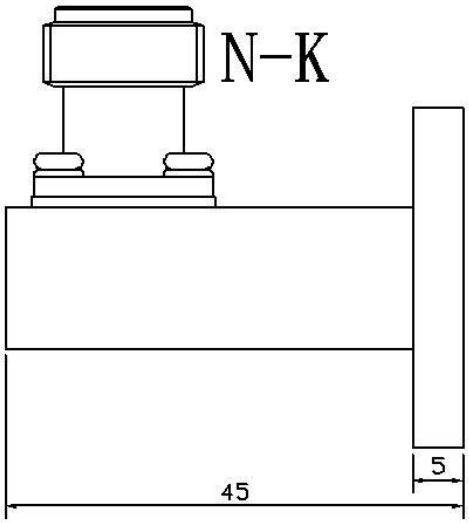

Document notice

Specifications are subject to revision. Before design release, confirm the current document revision and product-specific requirements with LCRF. The approved quotation and order documentation define the supplied configuration.