5150–5250 MHz PLL LFM Sweep Source



LCSYN-5150-5250-1 generates triangular LFM across 5150–5250 MHz. Its scan time is approximately 1 µs, saturated RF output is 2 dBm typically and typical output impedance is 50 Ω.

Typical operating voltage and current are 28 V and 0.12 A. The module has an SMA female RF output and a 68 × 48 × 20 mm body. Mounting ears extend the envelope to 80 × 48 × 20 mm; connector and supply-pin protrusions are excluded.

Electrical specifications

Parameter	Symbol	Minimum	Typical	Maximum	Unit
RF output frequency	BW	5150	-	5250	MHz
Saturated RF output power	PSAT	-	2	-	dBm
Output impedance	Impedance	-	50	-	Ω
Operating voltage	VDC	-	28	-	V
Operating current	IDD	-	0.12	-	A

RF interfaces

Interface	Specification
RF output connector	SMA, female

LFM waveform

Parameter	Value	Unit
Modulation type	Linear frequency modulation (LFM)	-
Waveform	Triangular	-
Scan time	Approximately 1	µs

Mechanical specifications

Parameter	Value	Unit
Body dimensions	68 × 48 × 20 (Body only; connector and supply-pin protrusions excluded.)	mm
Envelope including mounting ears	80 × 48 × 20 (Includes mounting ears; connector and supply-pin protrusions excluded.)	mm
Mounting holes	4 × Ø2.7	mm
Mounting-hole pitch	74 × 42	mm

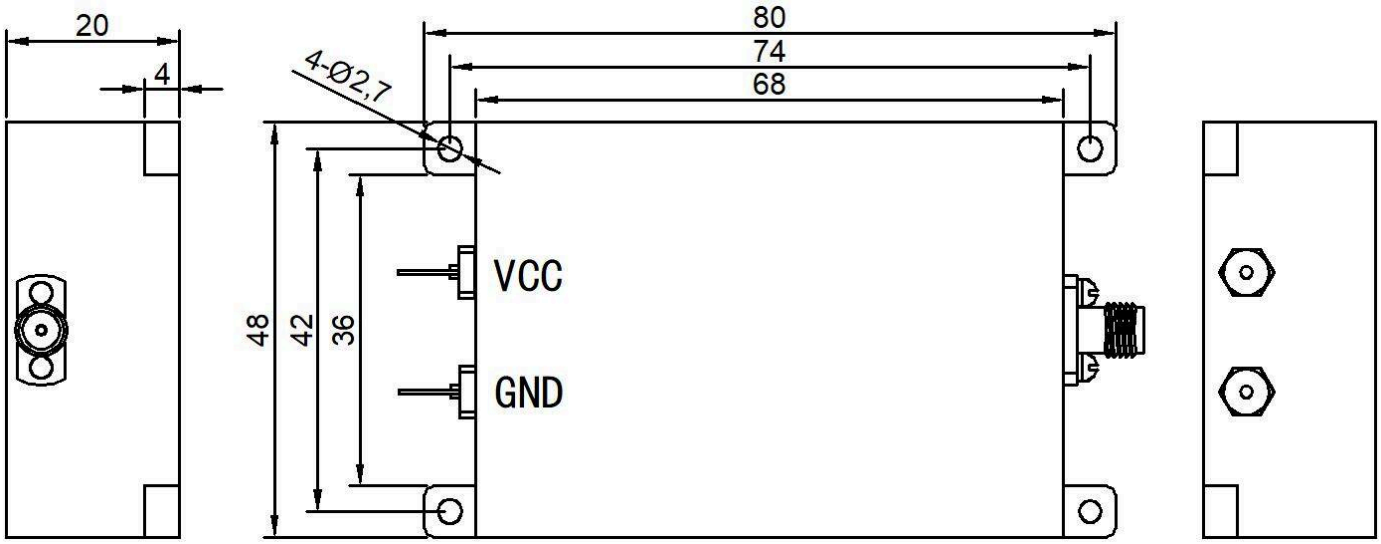

Document notice

Specifications are subject to revision. Before design release, confirm the current document revision and product-specific requirements with LCRF. The approved quotation and order documentation define the supplied configuration.