500–1000 MHz Four-Way RF Power Divider, 100 W

The divider distributes 500–1000 MHz to four paths with 100 W stated power handling. Typical insertion loss is 0.9 dB and amplitude balance is ≤±0.2 dB.

Specifications state phase balance ≤±5°, isolation 17 dB and VSWR≤1.5. Ports use SMA-K connectors and the surface has conductive plating.



Electrical specifications

Parameter	Value	Unit
Model number	LCPD-500-1000-100-4	-
Frequency range	500–1000 (Minimum: 500 MHz. Maximum: 1000 MHz.)	MHz
Number of ways	4	-
Insertion loss	0.9 (Typical: 0.9 dB.)	dB
Amplitude balance	≤±0.2 (Signed source balance notation retained.)	dB
Phase balance	≤±5 (Signed source balance notation retained.)	°
VSWR	≤1.5	-
Power handling	100	W
Isolation	17	dB
Connector type	SMA-K	-
Surface finish	Conductive plating	-

Mechanical Outline

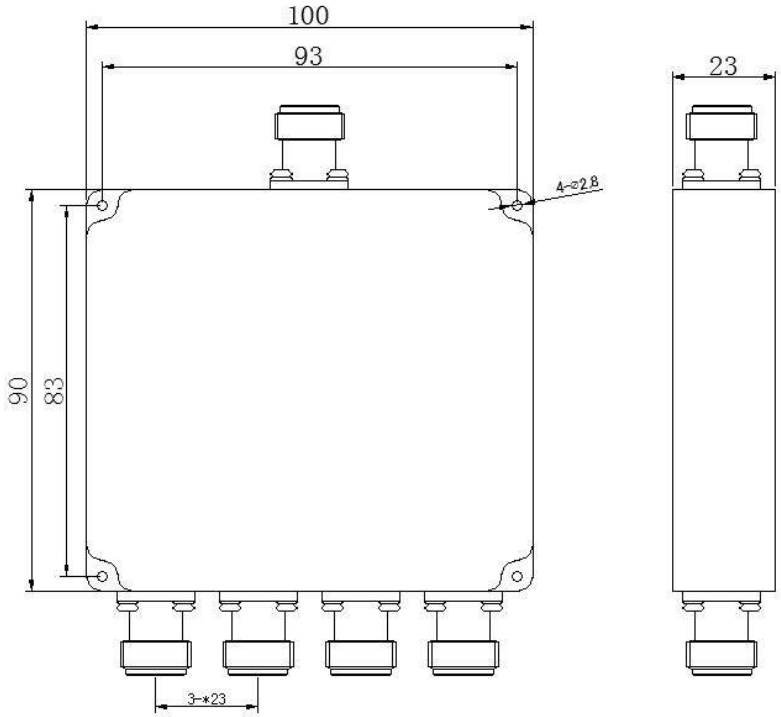

Document notice

Specifications are subject to revision. Before design release, confirm the current document revision and product-specific requirements with LCRF. The approved quotation and order documentation define the supplied configuration.