30–100 MHz Four-Way RF Power Divider, 100 W

The 30–100 MHz band splits into four paths with 100 W stated power handling and 0.9 dB typical insertion loss. Phase balance is ≤±5°.

Interfaces use SMA-K connectors. Isolation is stated as 17 dB, with VSWR≤1.5, amplitude balance ≤±0.2 dB and conductive plating.



Electrical specifications

Parameter	Value	Unit
Model number	LCPD-30-100-100-4	-
Frequency range	30–100 (Minimum: 30 MHz. Maximum: 100 MHz.)	MHz
Number of ways	4	-
Insertion loss	0.9 (Typical: 0.9 dB.)	dB
Amplitude balance	≤±0.2 (Signed source balance notation retained.)	dB
Phase balance	≤±5 (Signed source balance notation retained.)	°
VSWR	≤1.5	-
Power handling	100	W
Isolation	17	dB
Connector type	SMA-K	-
Surface finish	Conductive plating	-

Mechanical Outline

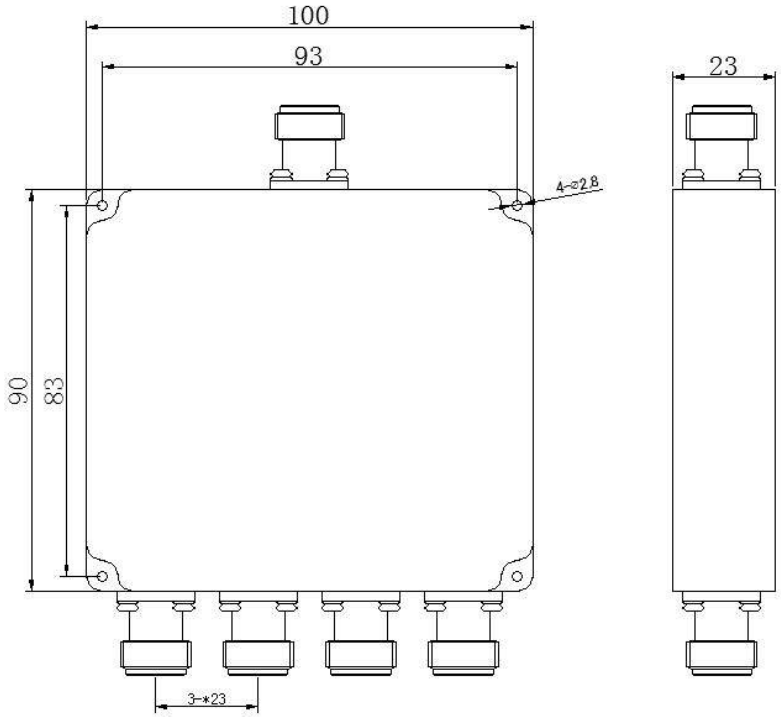

Document notice

Specifications are subject to revision. Before design release, confirm the current document revision and product-specific requirements with LCRF. The approved quotation and order documentation define the supplied configuration.