20–500 MHz RF Power Amplifier, 100 W Typical



The amplifier covers 20–500 MHz with 100 W typical output and gain from 40 dB minimum to 45 dB maximum. Current at 100 W is 6 A minimum, 8 A typical and 10 A maximum; operating voltage is 28–32 VDC.

Maximum dimensions are 180 × 90 × 22 mm and maximum weight is 1 kg, with SMA input/output. The source specifies D-Sub 4 power and D-Sub 15 control connectors, with overdrive, fan, temperature, VSWR and current signals.

Electrical Specifications

+28.0VDC; 25°C; 50Ω; 0dBm

Parameter	Symbol	Minimum	Typical	Maximum	Unit
Operating frequency	BW	20	-	500	MHz
Saturated RF output power	Pout	-	100	-	W
Power gain	Gp	40	-	45	dB
P-1	-	40	-	-	dBm
P-3	-	45	-	-	dBm
Power gain flatness	Gp	-	±2.5	-	dB
VSWR	S11	-	-	2	-
Harmonics at 100 W	H	-	-10	-	dBc
Spurious signals	Spur	-	-60	-	dBc
Input/output impedance	Impedance	-	50	-	Ω
Operating voltage	VDC	28	-	32	VDC
Power-added efficiency	Eff	-	35	-	%
Current consumption at Pout = 100 W	IDD	6	8	10	A

Monitoring and Protection

Parameter	Specification
Monitoring	Voltage, current, temperature and open/short-circuit detection
Output VSWR protection	VSWR = 3 → Normal; Open-circuit protection → Shutdown
Over-temperature protection	85 °C → Shutdown
Supply protection	(VDC >32 V) or (VDC <24 V) or Reversed polarity → Shutdown

Absolute Maximum Ratings

Parameter	Rating
RF input drive without damage	+10 dBm maximum
Thermal overload	85 °C → Shutdown (maximum)

Environmental Specifications

The environmental figures are design targets. Confirm the applicable values for your project.

Parameter	Minimum	Typical	Maximum	Unit
Operating temperature	-20	-	50	°C
Storage temperature [1]	-25	-	65	°C
Relative humidity (non-condensing)	-	-	95	%

[1] Storage temperature

DC and Control Interface

Pin #	Description	Specification
1-4	1-4 — Positive supply	+28 VDC
5-8	5-8 — Ground	Ground
9	9 — Overdrive alarm	-
10	10 — Fan control	-
11	11 — Temperature alarm	-
12	12 — VSWR alarm	-
13	13 — Power indicator	-
14	14 — Enable	-
15	15 — Overcurrent indicator	-

Mechanical Specifications

Parameter	Value	Unit
Dimensions	180 × 90 × 22[7.09 × 3.54 × 0.87] mm [in] (maximum)	mm [in]
Weight	1[2.2] kg [lb] (maximum)	kg [lb]
RF input connector	SMA, female	-
RF output connector	SMA, female	-
DC/control interface	Hybrid, D-Sub 4, male	-
Control connector	D-Sub 15, male	-

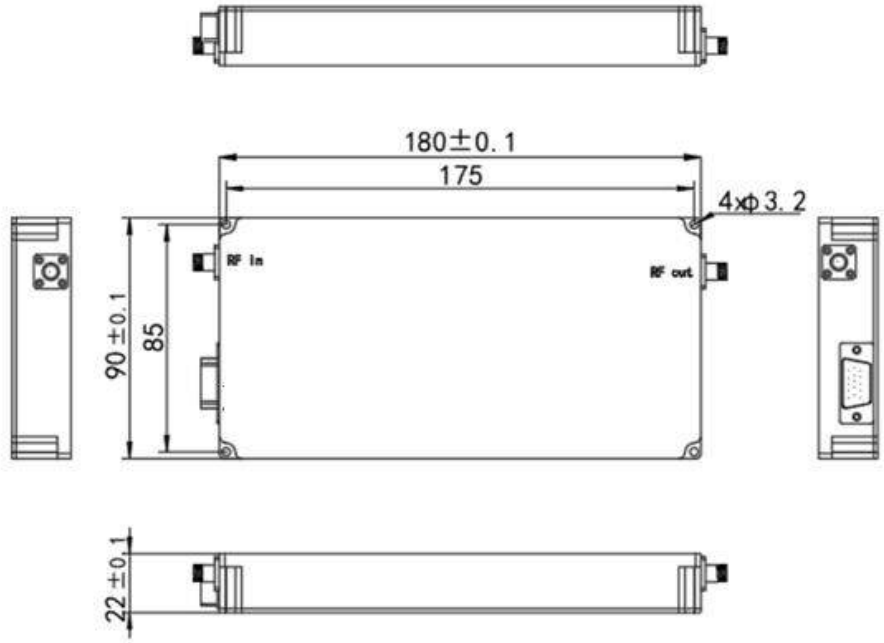

Current publication record · 1.4 · 2026-11-11. Specification tables updated. Replaces revision 1.3.

Document notice

Specifications are subject to revision. Before design release, confirm the current document revision and product-specific requirements with LCRF. The approved quotation and order documentation define the supplied configuration.