20–1000 MHz RF Power Amplifier, 50 W Typical



The amplifier starts at 20 MHz and extends to 1000 MHz, with 50 W typical saturated output and 47 dB typical gain. Typical flatness is ±2 dB and maximum input VSWR is 2.0:1.

Typical current is 8 A with a 28 V supply. SMA input/output and three-row D-Sub 15 are specified; dimensions excluding connectors are 180 × 90 × 22 mm. Protection covers open circuit, short circuit and output mismatch up to 5:1 VSWR.

Electrical Specifications

Parameter	Symbol	Minimum	Typical	Maximum	Unit
Operating frequency	BW	20	-	1000	MHz
Saturated RF output power	Psat	-	50	-	W
Small-signal gain	G	-	47	-	dB
Power gain flatness	ΔG	-	±2	-	dB
Input VSWR	VSWR	-	-	2.0:1	-
Harmonic suppression	H	-	10	-	dBc
Spurious suppression	Spur	65	70	-	dBc
Operating voltage	VDC	-	28	-	V
Current consumption	I	-	8	-	A

Monitoring and Protection

Parameter	Specification
Reverse-polarity protection	Integrated
Input overdrive protection	Maximum RF input: +10 dBm
Over-temperature protection	85 °C → Shutdown (maximum)
Output VSWR protection	VSWR ≤5.0:1
Over-current protection	Integrated
Open-circuit protection	Integrated
Short-circuit protection	Integrated

Mechanical and environmental specifications

Parameter	Value
RF input connector	SMA female
RF output connector	SMA female

Mechanical and environmental specifications

Parameter	Value
Power and control connector	D-Sub 15 (3 × 5)
Dimensions	180 × 90 × 22 mm (Excluding connectors)
Weight	≤1 kg
Operating temperature	−25 °C–+50 °C
Storage temperature	−30 °C–+75 °C
Relative humidity (non-condensing)	≤90%; Non-condensing

Mechanical Outline

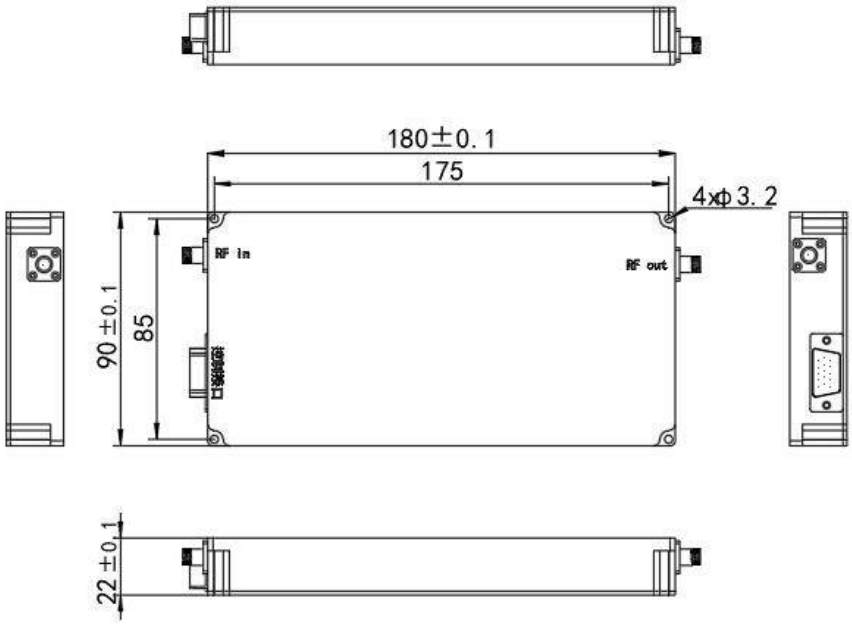

Document notice

Specifications are subject to revision. Before design release, confirm the current document revision and product-specific requirements with LCRF. The approved quotation and order documentation define the supplied configuration.