1000–6000 MHz RF Power Amplifier, 50 W Typical

The amplifier provides 50 W typical saturated output across 1000–6000 MHz and 49 dB typical small-signal gain. Typical harmonic suppression is 10 dBc; spurious suppression is 65 dBc minimum and 70 dBc typical.

Dimensions are 180 × 90 × 22 mm excluding connectors, with SMA RF ports and a three-row D-Sub 15 power/control connector. Typical current is 5 A at a 28 V supply, with reverse-polarity, input-overdrive, temperature and current protection.



Electrical Specifications

Parameter	Symbol	Minimum	Typical	Maximum	Unit
Operating frequency	BW	1000	-	6000	MHz
Saturated RF output power	Psat	-	50	-	W
Small-signal gain	G	-	49	-	dB
Power gain flatness	ΔG	-	±2	-	dB
Input VSWR	VSWR	-	-	2.0:1	-
Harmonic suppression	H	-	10	-	dBc
Spurious suppression	Spur	65	70	-	dBc
Operating voltage	VDC	-	28	-	V
Current consumption	I	-	5	-	A

Monitoring and Protection

Parameter	Specification
Reverse-polarity protection	Integrated
Input overdrive protection	Integrated
Over-temperature protection	85 °C → Shutdown (maximum)
Over-current protection	Integrated

Mechanical and environmental specifications

Parameter	Value
RF input connector	SMA female
RF output connector	SMA female
Power and control connector	D-Sub 15 (3 × 5)
Dimensions	180 × 90 × 22 mm (Excluding connectors)
Weight	≤1 kg
Operating temperature	−25 °C–+50 °C

Mechanical and environmental specifications

Parameter	Value
Storage temperature	−30 °C–+75 °C
Relative humidity (non-condensing)	≤90%; Non-condensing

Mechanical Outline

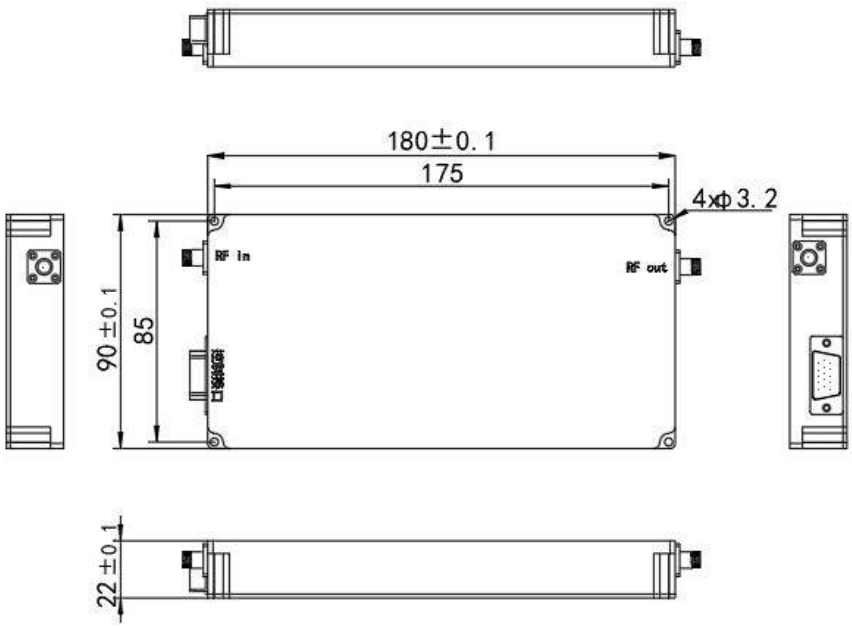

Document notice

Specifications are subject to revision. Before design release, confirm the current document revision and product-specific requirements with LCRF. The approved quotation and order documentation define the supplied configuration.