# 5725–5850 MHz PLL Linear Frequency Sweep Source

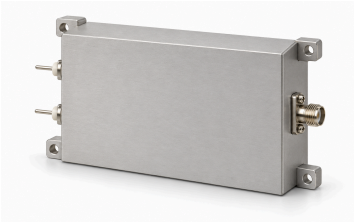

LCLFM-5725-5850-1 generates a triangular analog LFM sweep across 5725–5850 MHz. The stated scan time is approximately 1 µs. Its RF table lists 2 dBm typical saturated output and 50 Ω typical output impedance, with an SMA female connector.

The source specifies 28 V and 0.12 A typical supply values. The native drawing gives 80 × 48 × 20 mm outer dimensions, 74 × 42 mm mounting centers and VCC/GND connections. There is no supplied sweep-linearity, trigger, synchronization, frequency-accuracy or environmental rating; those details need confirmation for the intended integration.

## Electrical specifications

| Parameter | Value | Unit |
|---|---|---|
| Output frequency | 5725–5850 | MHz |
| Saturated output power (Psat) | 2 (Typical) | dBm |
| Output impedance | 50 (Typical) | Ω |
| Supply voltage | 28 (Typical) | VDC |
| Supply current | 0.12 (Typical) | A |

## Modulation and sweep

| Parameter | Value | Unit |
|---|---|---|
| Modulation type | Linear frequency modulation (LFM) | - |
| Waveform | Triangular | - |
| Scan time | ≈1 (Approximate source timing; not an exact sweep-time guarantee.) | µs |
| Source architecture | PLL | - |

## Interfaces and contacts

| Interface | Specification |
|---|---|
| RF output connector | SMA female |
| Power interface | VCC / GND |

## Mechanical specifications

| Parameter | Value | Unit |
|---|---|---|
| Outline dimensions | 80 × 48 × 20 | mm |
| Mounting-hole center spacing | 74 × 42 | mm |
| Mounting holes | 4 × Φ2.7 | mm |

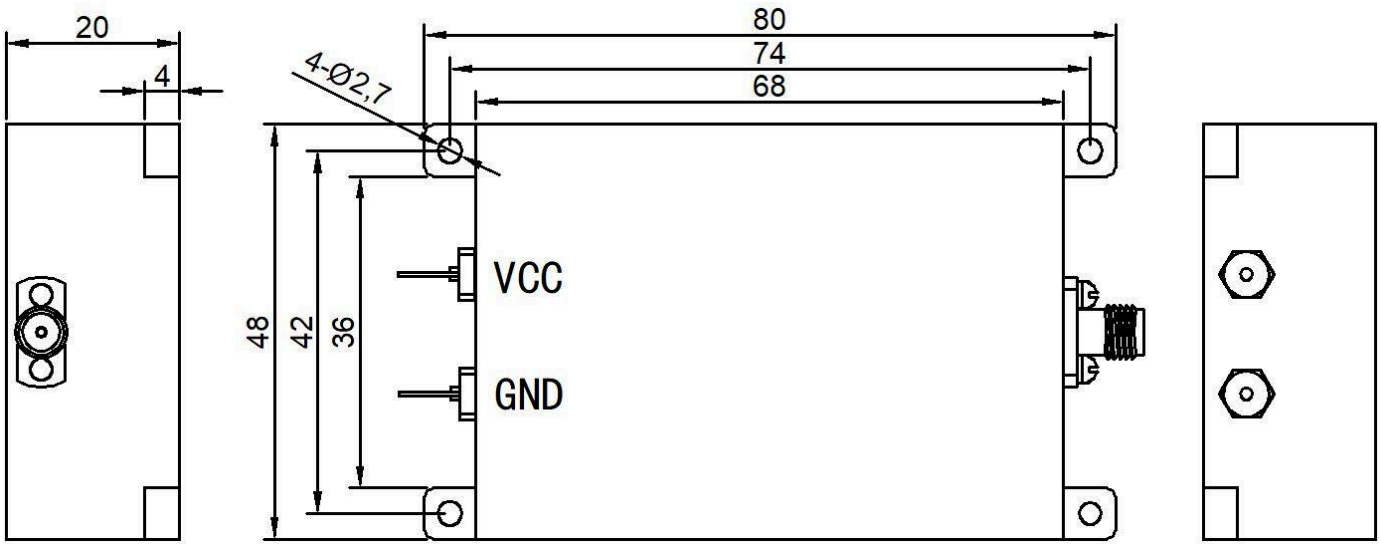


**Document notice**

Specifications are subject to revision. Before design release, confirm the current document revision and product-specific requirements with LCRF. The approved quotation and order documentation define the supplied configuration.