5150–5250 MHz PLL Linear Frequency Sweep Source

LCLFM-5150-5250-1 sweeps 5150–5250 MHz with an analog PLL-based LFM waveform. The waveform is triangular and the stated scan time is approximately 1 µs. Saturated RF output is 2 dBm typical, through an SMA female connector; output impedance is 50 Ω typical.

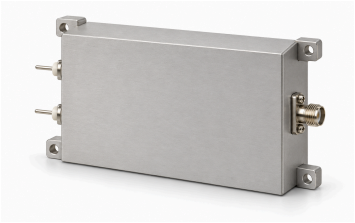

The source lists 28 V and 0.12 A as typical supply values. Its outer outline is 80 × 48 × 20 mm with four Φ2.7 mm mounting holes and 74 × 42 mm hole centers.

Integration requires confirmation of unspecified sweep linearity, trigger timing, synchronization and environmental limits; the approximately 1 µs value is not converted into a guaranteed sweep rate.

Electrical specifications

Parameter	Value	Unit
Output frequency	5150–5250	MHz
Saturated output power (Psat)	2 (Typical)	dBm
Output impedance	50 (Typical)	Ω
Supply voltage	28 (Typical)	VDC
Supply current	0.12 (Typical)	A

Modulation and sweep

Parameter	Value	Unit
Modulation type	Linear frequency modulation (LFM)	-
Waveform	Triangular	-
Scan time	≈1 (Approximate source timing; not an exact sweep-time guarantee.)	µs
Source architecture	PLL	-

Interfaces and contacts

Interface	Specification
RF output connector	SMA female
Power interface	VCC / GND

Mechanical specifications

Parameter	Value	Unit
Outline dimensions	80 × 48 × 20	mm
Mounting-hole center spacing	74 × 42	mm
Mounting holes	4 × Φ2.7	mm

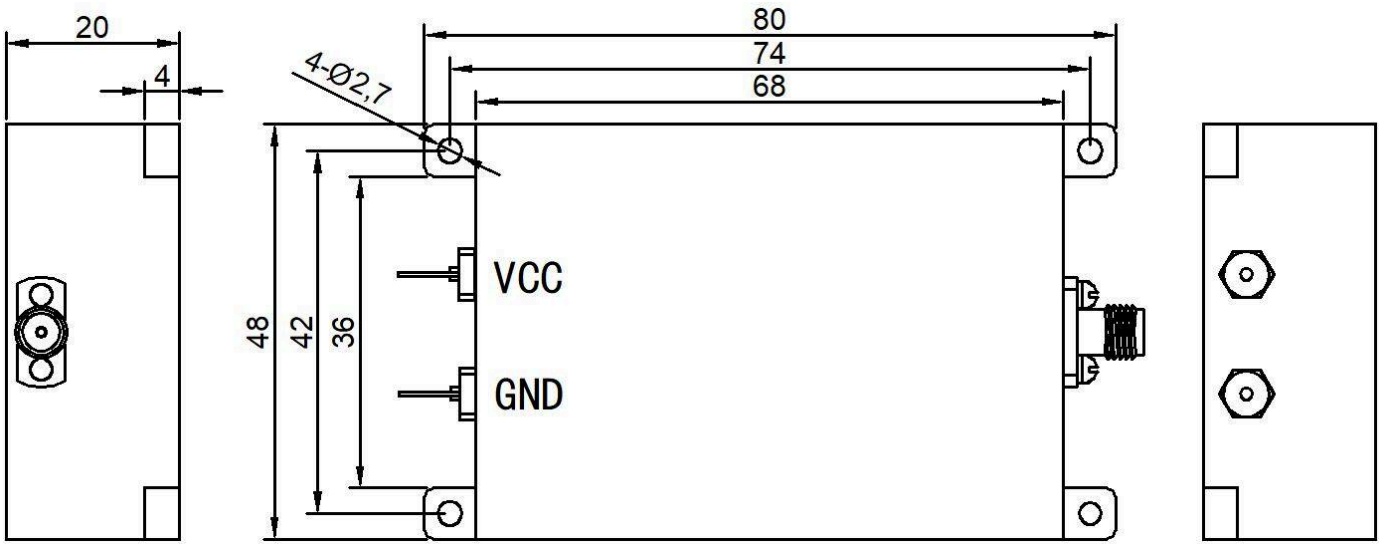

Document notice

Specifications are subject to revision. Before design release, confirm the current document revision and product-specific requirements with LCRF. The approved quotation and order documentation define the supplied configuration.