2400–2500 MHz PLL Linear Frequency Sweep Source

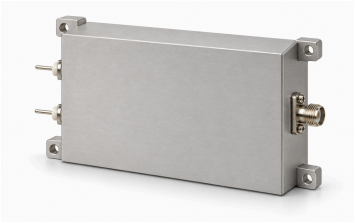

LCLFM-2400-2500-1 generates an analog triangular frequency sweep over 2400–2500 MHz using PLL technology. The source specifies an approximately 1 µs scan time and 5 dBm typical RF output at saturation. Output impedance is 50 Ω typical.

Typical supply values are 28 V and 0.12 A. The original outline shows VCC/GND connections, 80 × 48 × 20 mm outer dimensions and 74 × 42 mm mounting centers. Sweep linearity, triggering, synchronization, frequency accuracy and environmental limits are not specified; no values are inferred for these integration requirements.

Electrical specifications

Parameter	Value	Unit
Output frequency	2400–2500	MHz
Saturated output power (Psat)	5 (Typical)	dBm
Output impedance	50 (Typical)	Ω
Supply voltage	28 (Typical)	VDC
Supply current	0.12 (Typical)	A

Modulation and sweep

Parameter	Value	Unit
Modulation type	Linear frequency modulation (LFM)	-
Waveform	Triangular	-
Scan time	≈1 (Approximate source timing; not an exact sweep-time guarantee.)	µs
Source architecture	PLL	-

Interfaces and contacts

Interface	Specification
RF output connector	SMA female
Power interface	VCC / GND

Mechanical specifications

Parameter	Value	Unit
Outline dimensions	80 × 48 × 20	mm
Mounting-hole center spacing	74 × 42	mm
Mounting holes	4 × Φ2.7	mm

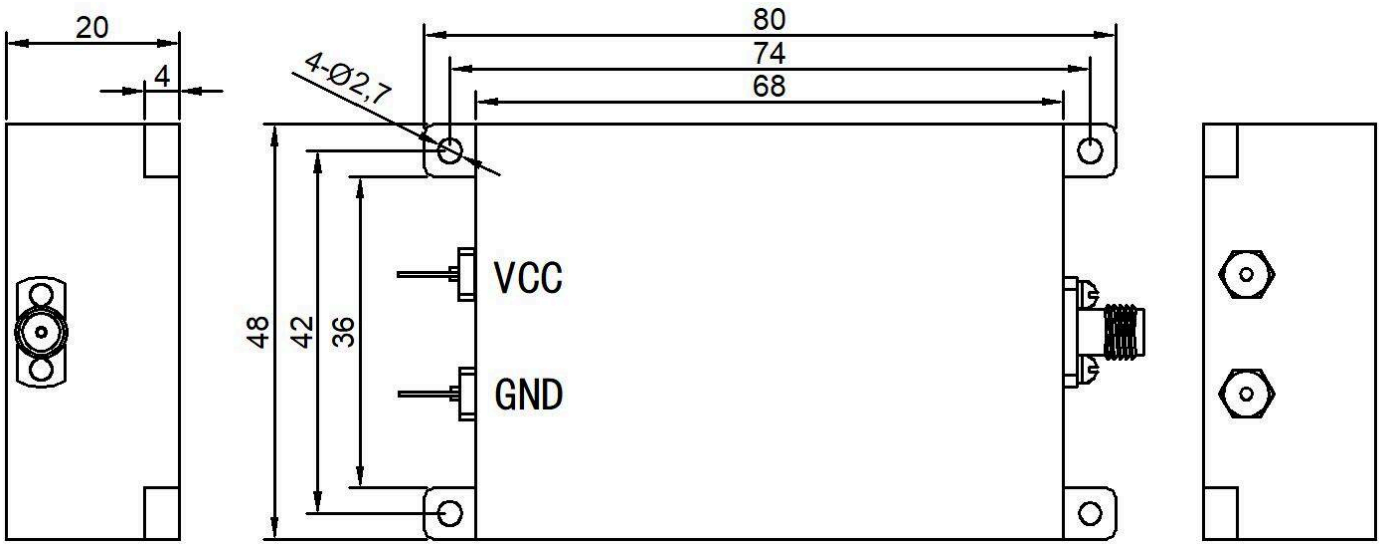

Document notice

Specifications are subject to revision. Before design release, confirm the current document revision and product-specific requirements with LCRF. The approved quotation and order documentation define the supplied configuration.