30 MHz–6 GHz RF Bias Tee

This bias tee combines the 30 MHz–6 GHz RF path with DC bias injection. The source table lists 1 dB insertion loss and 0.3 A operating current as typical values.

Input and combined RF/DC output use SMA-K female connectors. The table places 5/12 V in the typical column, with 30 V maximum voltage and +35 dBm maximum input power.

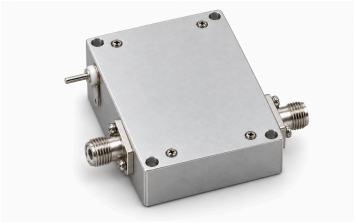

Electrical specifications

Parameter	Value	Unit
Frequency range	30–6000	MHz
Insertion loss	1 (Typical)	dB
Return loss	−15 (Typical)	dB
Operating voltage [1]	5 / 12; ≤30	V
Operating current	0.3 (Typical)	A

[1] Typical: 5/12 V. Maximum: 30 V.

Absolute maximum ratings

Parameter	Value	Unit
Maximum operating voltage [1]	+30	V
Maximum input power [2]	+35	dBm
Operating temperature [3]	−40–+70	°C
Storage temperature [4]	−40–+85	°C

[1] Maximum: 30 V.
[2] Maximum: 35 dBm.
[3] Maximum: 70 °C.
[4] Maximum: 85 °C.

Mechanical specifications

Parameter	Value
Dimensions	38 × 30 × 12 (Dimension unit is not explicitly stated in the source.)
RF input connector	SMA-K — Female
RF and DC output connector	SMA-K — Female; RF and DC output
DC input interface	DC supply interface

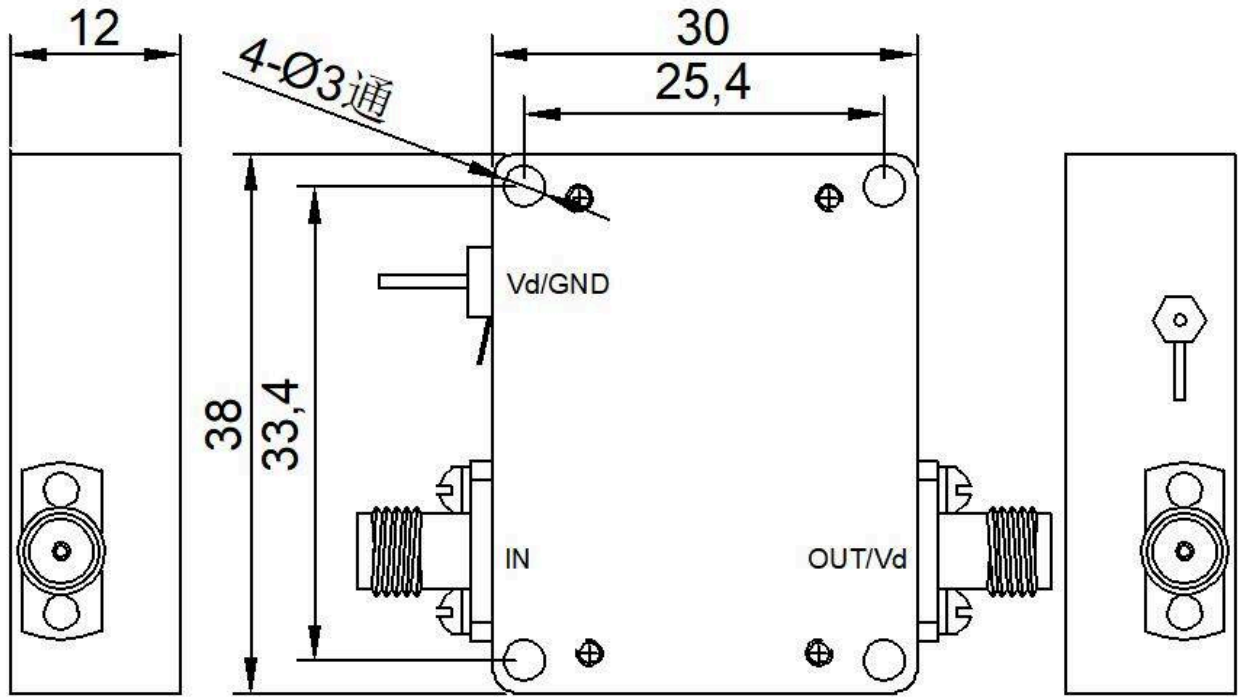

Document notice

Specifications are subject to revision. Before design release, confirm the current document revision and product-specific requirements with LCRF. The approved quotation and order documentation define the supplied configuration.